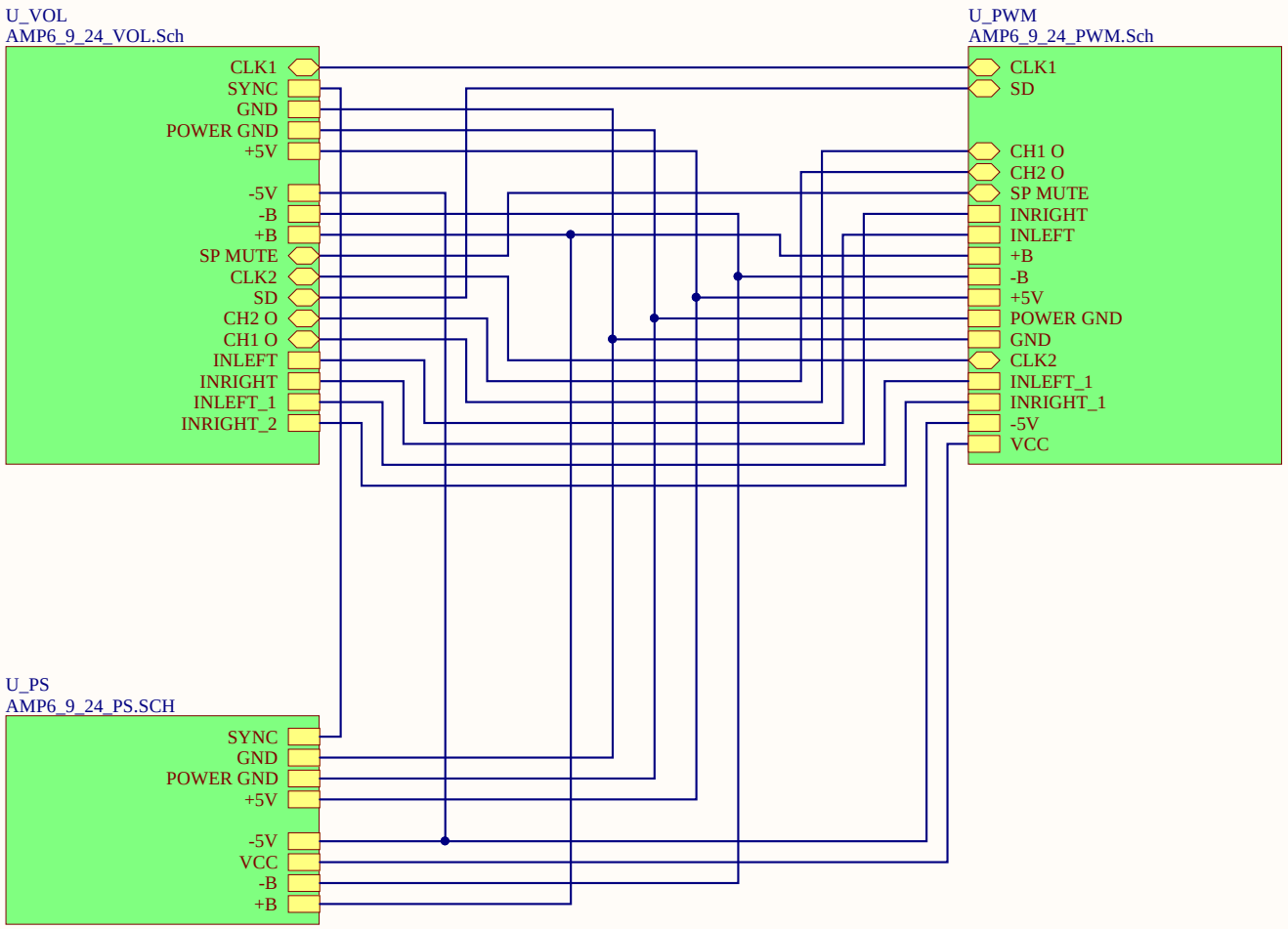

Title		
Size: A	Number	Revision
Date: 3/3/2020		Sheet of
File: C:\Liz\..\AMP6_9_24_CON.SchDoc		Drawn By:

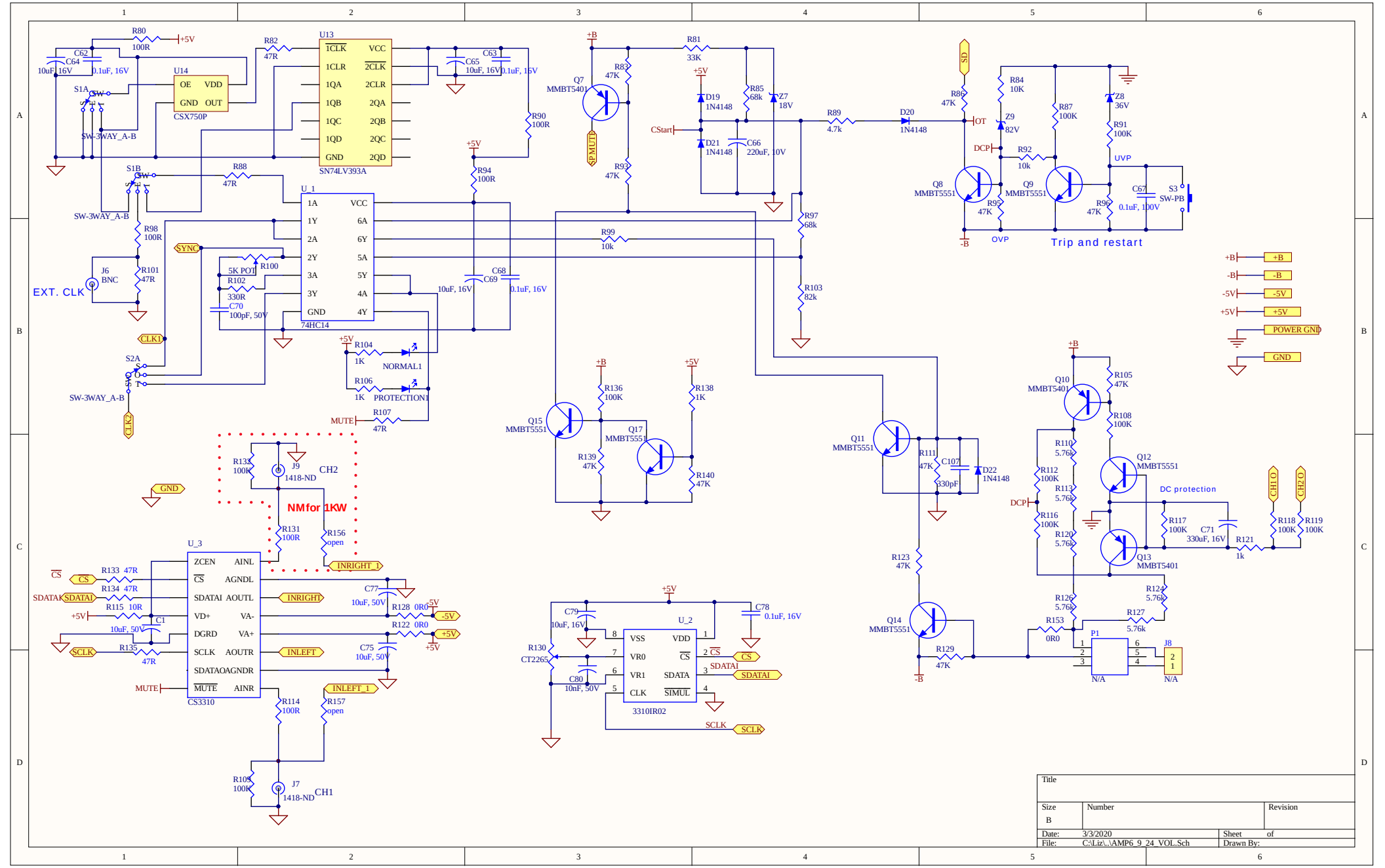
EXT. CLK
SW-3WAY_A-B
SN74LV393A
74HC14
CSX750P
CS3310
3310IR02
NMfor 1KW
Trip and restart
DC protection
OVP
NORMAL1
PROTECTION1
CH1
CH2
POWER GND
Title
Size
B
Number
Revision
Date: 3/3/2020
File: C:\Liz\..\AMP6_9_24_VOL.Sch
Sheet of
Drawn By:

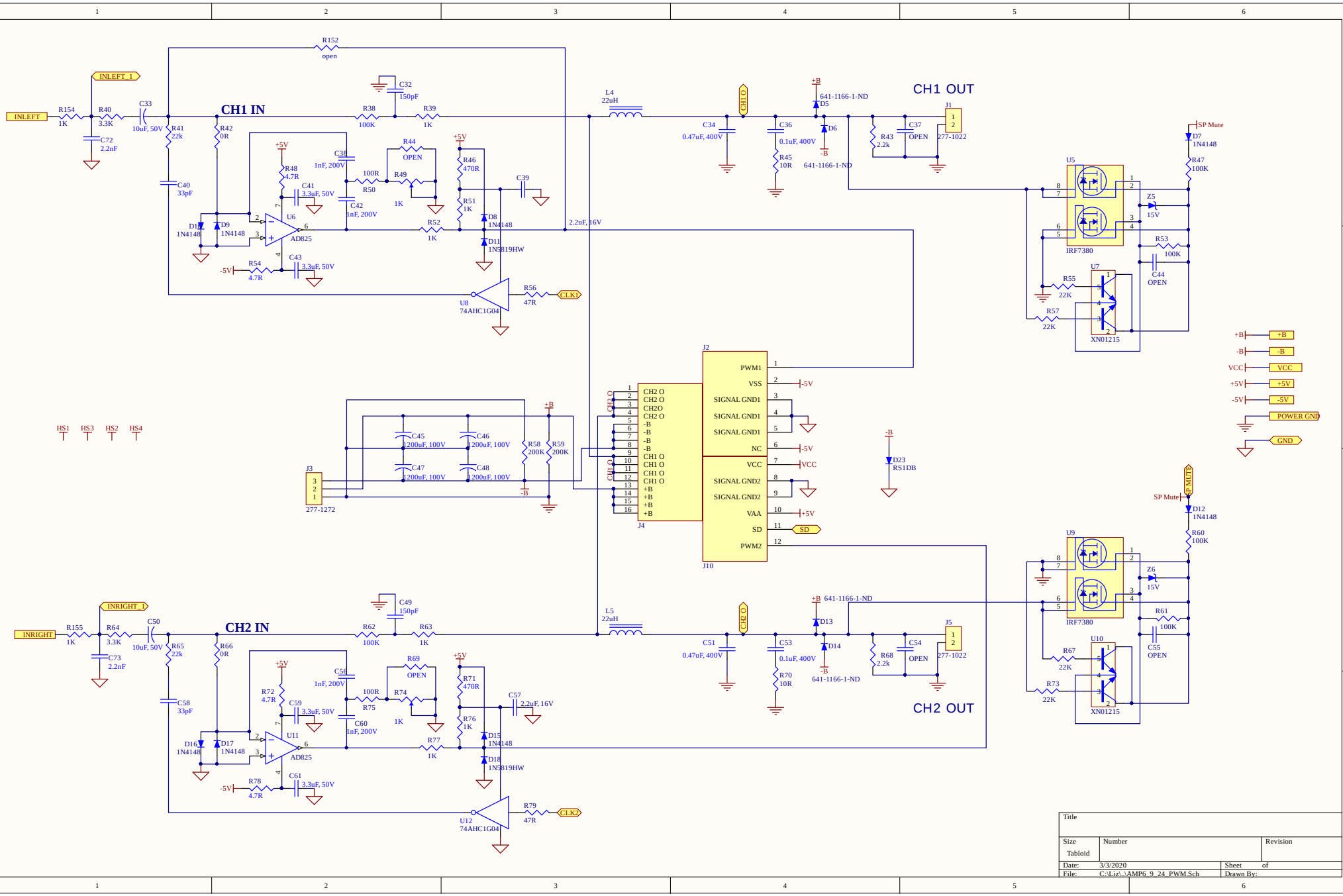

CH1 IN
CH1 OUT
CH2 IN
CH2 OUT
INLEFT
INLEFT_1
INRIGHT
INRIGHT_1
R152 open
R154 1K
R40 3.3K
C33 10uF, 50V
C72 2.2nF
R41 22k
R42 0R
C40 33pF
C32 150pF
R38 100K
R39 1K
L4 22uH
C34 0.47uF, 400V
C36 0.1uF, 400V
R45 10R
D5 641-1166-1-ND
D6 641-1166-1-ND
R43 2.2k
C37 OPEN
J1 277-1022
SP Mute
D7 1N4148
R47 100K
U5 IRF7380
Z5 15V
R53 100K
C44 OPEN
U7 XN01215
R55 22K
R57 22K
R48 4.7R
C41 3.3uF, 50V
C38 1nF, 200V
C42 1nF, 200V
R44 OPEN
R49 1K
R50 100R
R46 470R
R51 1K
C39
D8 1N4148
D11 1N5819HW
D10 1N4148
D9 1N4148
U6 AD825
R52 1K
C43 3.3uF, 50V
R54 4.7R
2.2uF, 16V
U8 74AHC1G04
R56 47R
CLK1
J2
J10
J4
PWM1
VSS
SIGNAL GND1
NC
VCC
SIGNAL GND2
VAA
SD
PWM2
CH2 O
CH1 O
D23 RS1DB
+B
-B
VCC
+5V
-5V
POWER GND
GND
HS1
HS3
HS2
HS4
J3 277-1272
C45 1200uF, 100V
C46 1200uF, 100V
C47 1200uF, 100V
C48 1200uF, 100V
R58 200K
R59 200K
SP MUTE
D12 1N4148
R60 100K
U9 IRF7380
Z6 15V
R61 100K
C55 OPEN
U10 XN01215
R67 22K
R73 22K
R155 1K
R64 3.3K
C50 10uF, 50V
C73 2.2nF
R65 22k
R66 0R
C58 33pF
C49 150pF
R62 100K
R63 1K
L5 22uH
C51 0.47uF, 400V
C53 0.1uF, 400V
R70 10R
D13 641-1166-1-ND
D14 641-1166-1-ND
R68 2.2k
C54 OPEN
J5 277-1022
R72 4.7R
C59 3.3uF, 50V
C56 1nF, 200V
C60 1nF, 200V
R69 OPEN
R74 1K
R75 100R
R71 470R
R76 1K
C57 2.2uF, 16V
D16 1N4148
D17 1N4148
U11 AD825
R77 1K
D15 1N4148
D18 1N5819HW
R78 4.7R
C61 3.3uF, 50V
U12 74AHC1G04
R79 47R
CLK2
Title
Size Tabloid
Number
Revision
Date: 3/3/2020
Sheet of
File: C:\Liz\..\AMP6_9_24_PWM.Sch
Drawn By:

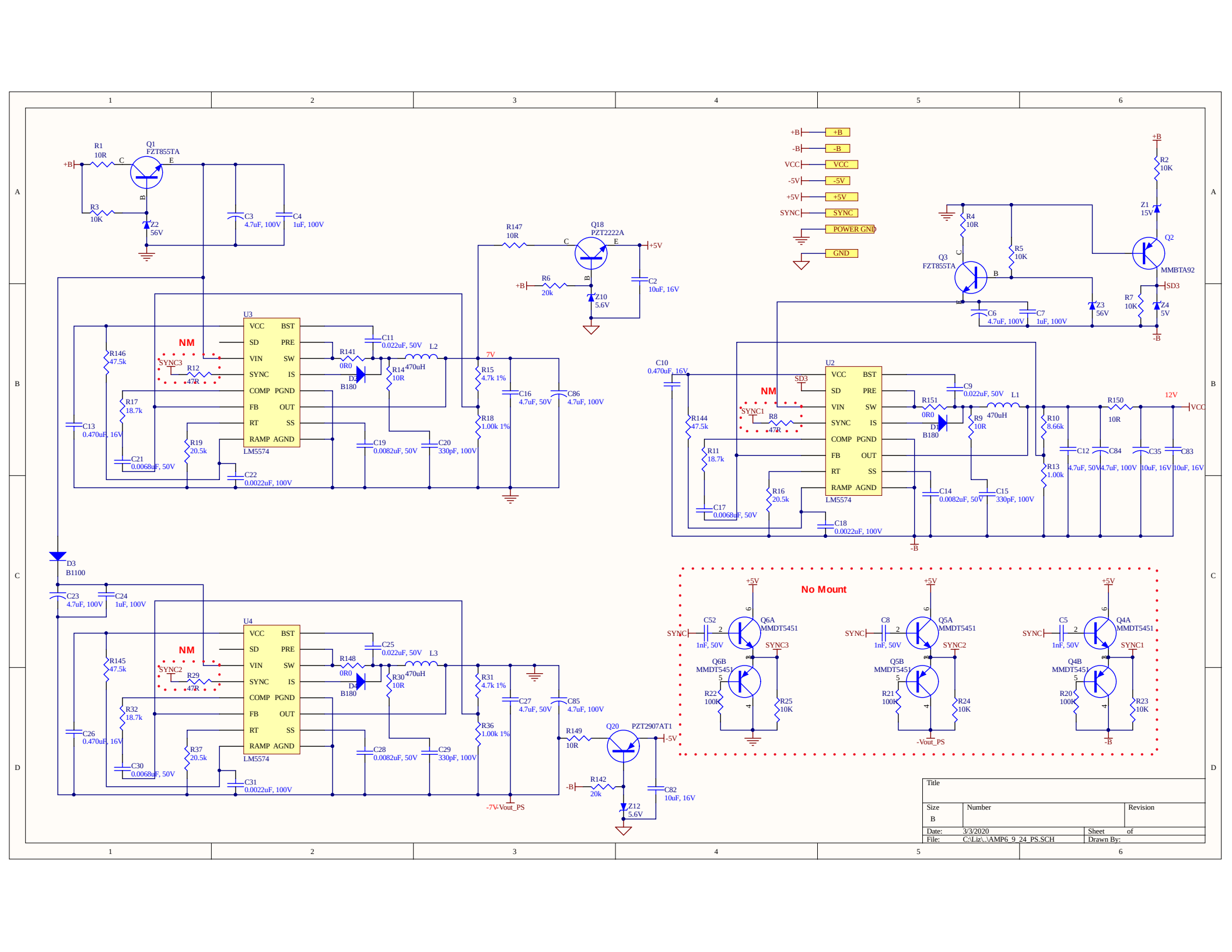
+B
-B
VCC
-5V
+5V
SYNC
POWER GND
GND
No Mount
-Vout_PS
Title
Size
B
Number
Revision
Date: 3/3/2020
Sheet of
File: C:\Liz\..\AMP6_9_24_PS.SCH
Drawn By: